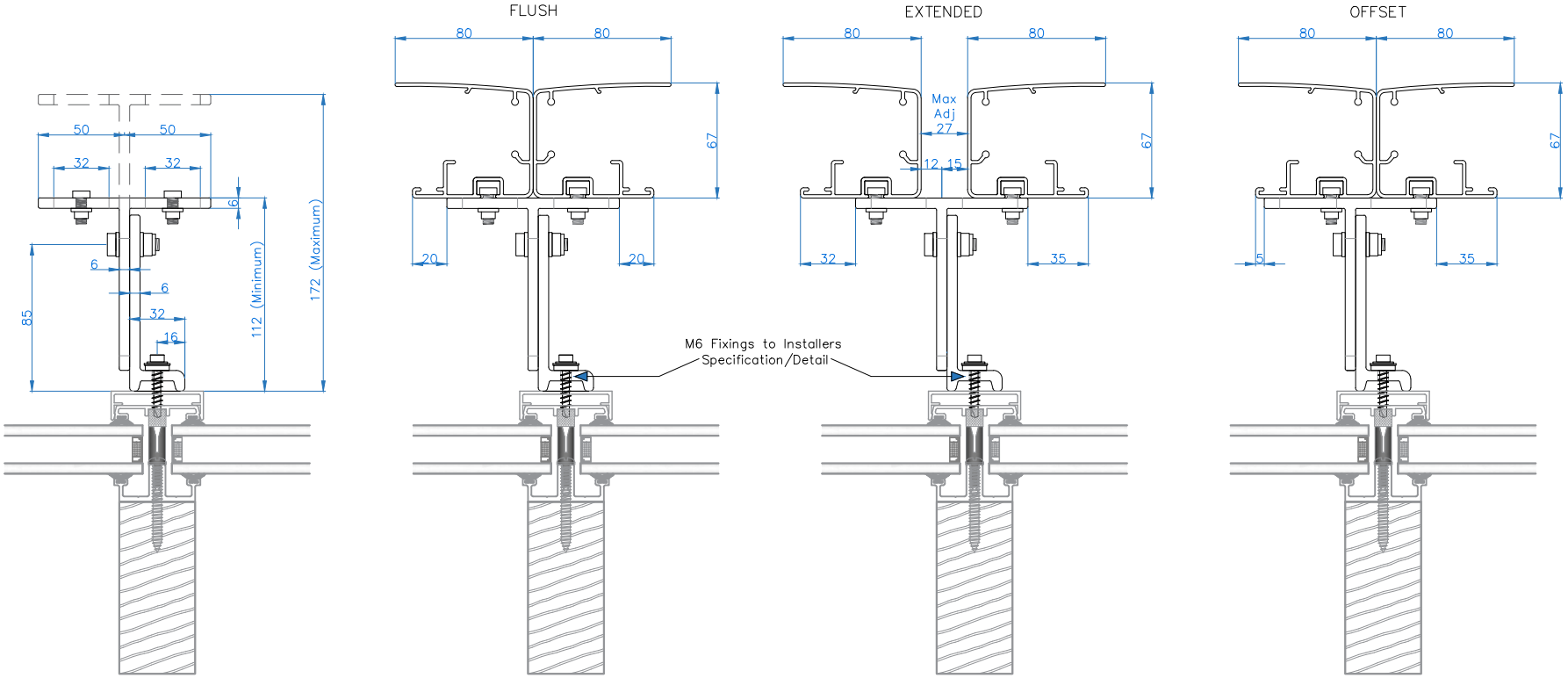

All dimensions are shown in millimetres unless otherwise stated

CARIBBEAN BLINDS UK LTD

Tel: 0344 800 1947
info@cbsolarshading.co.uk
www.cbsolarshading.co.uk
HEAD OFFICE, FACTORY & SHOWSITE
Woodhall Business Park, Sudbury, Suffolk, CO10 1WH

It is Caribbean Blinds UK Ltd policy to continuously develop and improve our products. We therefore reserve the right to modify or change the detail/design at our discretion and without prior notice. This drawing is the copyright and sole property of Caribbean Blinds UK Ltd. The design/information is private and confidential. It must not be copied, exhibited or communicated to third parties for any purpose other than that for which it was issued without the written consent of Caribbean Blinds UK Ltd.

Drawing Name: Cayman Mounting Detail & Arrangement Face Fix Bracket – Twin

Drawing Number: CB/TRB/CAY/MDA–FFT

Date: 05/04/2022 | Scale: NTS | Drawn By: CB